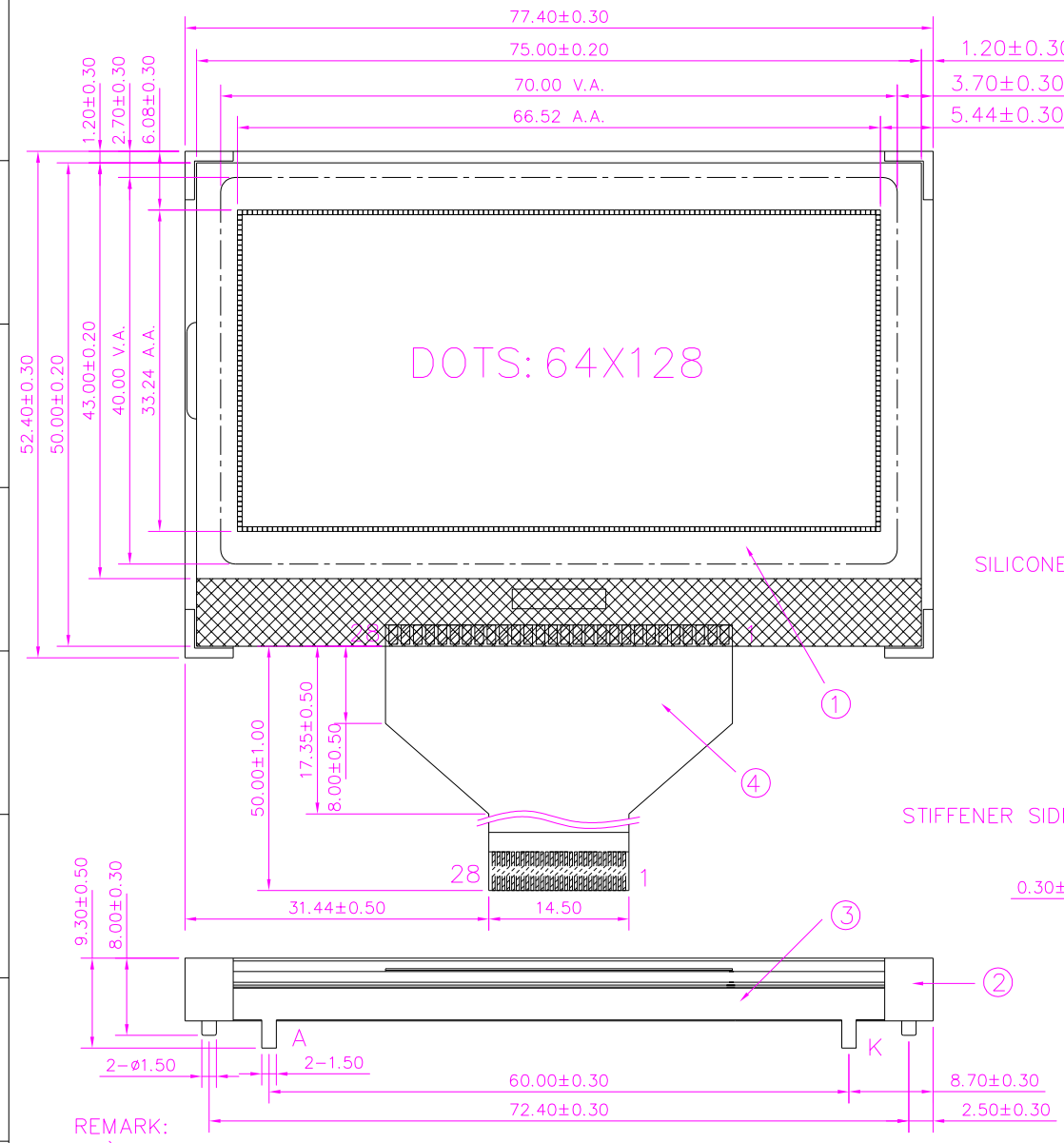

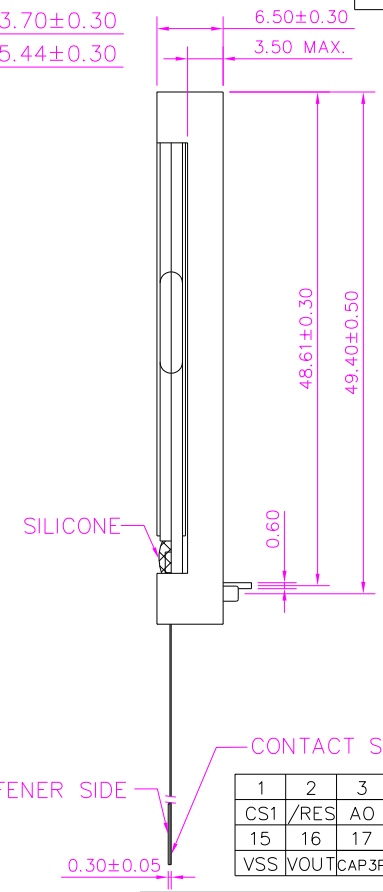

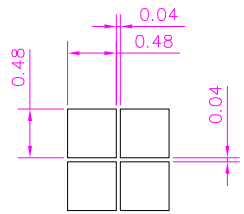

DOT DETAIL
SCALE 20:1

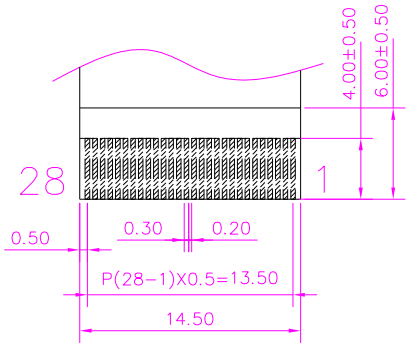

SCALE 3:1

1	2	3	4	5	6	7	8	9	10	11	12	13	14
CS1	/RES	A0	/WR	/RD	D0	I	D2	D3	D4	D5	D6	D7	VDD
15	16	17	18	19	20	21	22	23	24	25	26	27	28
VSS	VOUT	CAP3P	CAP1N	CAP1P	CAP2P	CAP2N	V4	V3	V2	V1	V0	C86	P/S

NO	DESCRIPTION	MATERIAL	NOFF
4	FPC		
3	PCB	FR4/0.6mmT	
2	LIGHTGUIDE	PC TRANSPARENT	
1	COG		

CRN	ISSUE	ZONE	REVISIONS	DATE	CHK	APPD
	1					

REMARK:
1) VDD: 3.0V±5%
2) LCD CHARACTERISTICS: Vop: 9.0V, Top: −20°C TO 70°C, Tstg: −30°C TO 80°C, 1/65DUTY, 1/9BIAS, 6 O'CLOCK, FSTN, POSITIVE, TRANSFLECTIVE.
3) BACKLIGHT COLOR: WHITE, Vf: 3.2V±0.2V, If(typ): 80mA, LUM: 30cd/m²(MIN)
4) COG DRIVER: ST7565R-G
5) RoHS COMPLIANCE.

GENERAL TOLERANCE: LINEAR − .X ±0.20, − .XX ±0.20; ANGULAR − ±1/2°	DO NOT SCALE DRAWING	TITLE: 64128MX FC BW-3	REV: A
	DRN: DONG / DATE: 1 APR 08		
ALL DIMENSIONS ARE IN METRIC UNLESS OTHERWISE SPECIFIED	CHK: LCZ / DATE: 1 APR 08	MODEL: AE64	FILE NAME: AE64Aas1
SCALE: 2/1 OR NOTED	APPD: YWS / DATE: 1 APR 08	MATERIAL: REFER NOTE	FINISH: REFER NOTE
DISPLAYTECH LTD.			SH 1 OF 3 — A3